CD ø 301

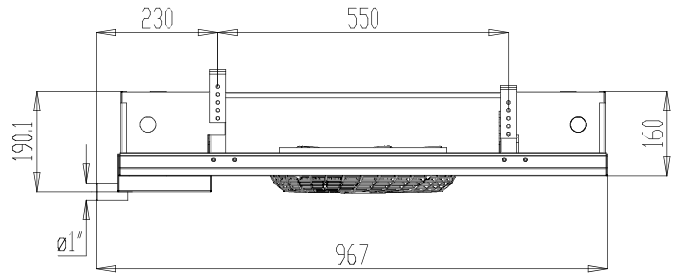

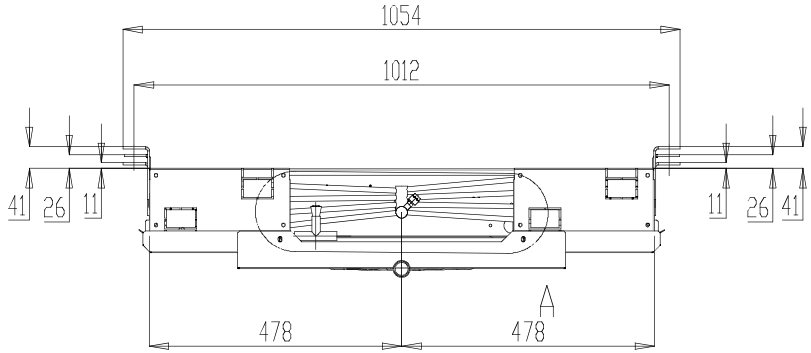

DETAIL A
SCALE 1 : 5

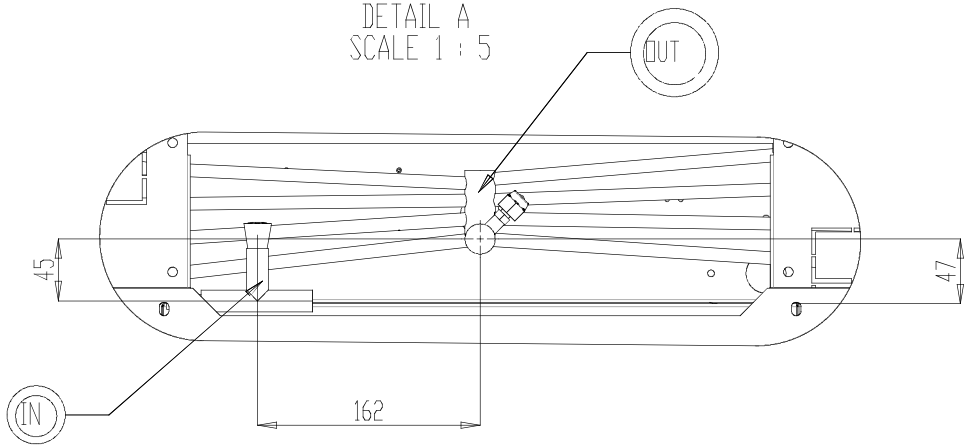

REV	Date	Modifications	Pevisor	Approved by
01	14.05.2014	Update drawing		Tozzo

www.alfalaval.com

Weight	Dimensions
62.0Kg	mm

Drawn by	Date	Approved by	Date	Treatment
	09/05/2013			

Scale	1:13
Format	A3

Assosiated / References to

Replaces

SERIES Optigo CD 300 Direct Expansion

Optigo CD

Interface class M EN 22768-1 22768-2

CD 301_Dx -01

Article number REV

This document and its contents is owned by Alfa Laval AB (publ.) or its affiliates and protected by laws governing intellectual property and thereto related rights. Without limiting any rights related to this document, no part of this document may be copied, reproduced or transmitted in any form or by any means (electronic, mechanical, photocopying, recording, or otherwise), or for any purpose, without the expressed permission of Alfa Laval. Nor may it be used in any other way or for any other purpose than expressly permitted by Alfa Laval. Alfa Laval will enforce its rights related to this document to the fullest extent of the law, including the seeking of criminal prosecution.